Contemporary Ideas on Ship Stability
ELSEVIER Science Ltd., pp.449-495 (2000)

STABILITY OF A PLANING CRAFT IN TURNING MOTION

Y. Ikeda [1], H. Okumura [1] and T. Katayama [1]

[1] Department of Marine System Engineering, Osaka Prefecture University,
1-1, Gakuen-Cho, Sakai, Osaka, 599-8531, Japan

ABSTRACT

The stability of a hard-chine planing hull in turning at high speed is examined on the basis of experiments. Six-components of hydrodynamic forces acting on a fully captured model are measured by an oblique towing test at Froude number of 2.0 to 4.4 in which attitudes; trim, rise and heel angle, are changed systematically.

The experimental results show that all hydrodynamic forces are proportional to the square of advanced speed at planing speed. The results also demonstrate that the effects of attitude on the hydrodynamic forces are significant, and that the restoring roll moment decreases rapidly with increasing yaw angle. The reduction of the restoring moment may cause large heel in turning motion.

KEYWARDS

High-Speed, Planing Craft, Maneuverability, Hydrodynamic Forces, Stability, Oblique

INTRODUCTION

For a planing craft in turning at high speed, the stability quality is a very important factor for its safety. However, the characteristics of hydrodynamic forces acting on a planing craft in turning condition have not been clarified yet.

In the present study, six-component hydrodynamic forces acting on a model obliquely towed at constant high speed are measured for various attitudes, rise, heel and trim, in the towing tank of Osaka Prefecture University. The characteristics of the hydrodynamic forces acting on a planing hull are investigated.

EXPERIMENTAL SETUP

The model used in the experiment is a 1/4-scale model of a personal watercraft with water-jet propulsion. The principal particulars of the model are shown in TABLE 1. The hull is hard-chine type, and has a duct without any impeller.

TABLE 1
PRINCIPAL PARTICULARS OF MODEL

length(m)	L	0.630
breadth(m)	B	0.223
depth(m)	D	0.100
draft(m)	d	0.055
ship weight(kgf)	W	5.796
KG(m)		0.107
LCG from transom(m)		0.255
Deadrise angle(degree)		22

The experimental setup is shown in Figure 1. The model is captured by 6-component load cell, and towed by an unmanned carriage the maximum speed of which is 15m/s. The rise H (mm), heel angle ϕ(deg.), trim angle τ (deg.) and yaw angle β (deg.) are systematically changed as shown in TABLE 2. The rise here is defined by vertical displacement of the center point of rotation to change trim angle, which is located at 0.178m from the keel line at midship. The zero levels of all measured forces are set at rest just before starting of the carriage. The measured roll, pitch and yaw moments around the load cell are converted into the values about the standard location of the center of gravity of the craft.

The measured forces are non-dimensionalized as follows,

$$C_{Fx} = \frac{Fx}{0.5\,rSyU^2} \qquad (1)$$

$$C_{Fy} = \frac{Fy}{0.5\,rSyU^2} \qquad (2)$$

$$C_{Mx} = \frac{Mx}{W \cdot B} \qquad (3)$$

$$C_{My} = \frac{My}{0.5\,rSxLU^2} \qquad (4)$$

$$C_{Mz} = \frac{Mz}{0.5\,rSyLU^2} \qquad (5)$$

$$C_{Fz} = \frac{Fz}{0.5\,rSzU^2} \qquad (6)$$

where, *Fx*: resistance, *Fy*: transverse force, *Fx*: vertical lift, *Mx*: roll moment, *My*: trim moment, *Mz*: yaw moment, *Sy*: projected area of wetted body from side, *Sz*: water plane area, *L*: overall length of a craft, B: breadth, W: displacement and ρ: density of water. In them, *Sy* and *Sz* are calculated for each attitude without any disturbance on free surface.

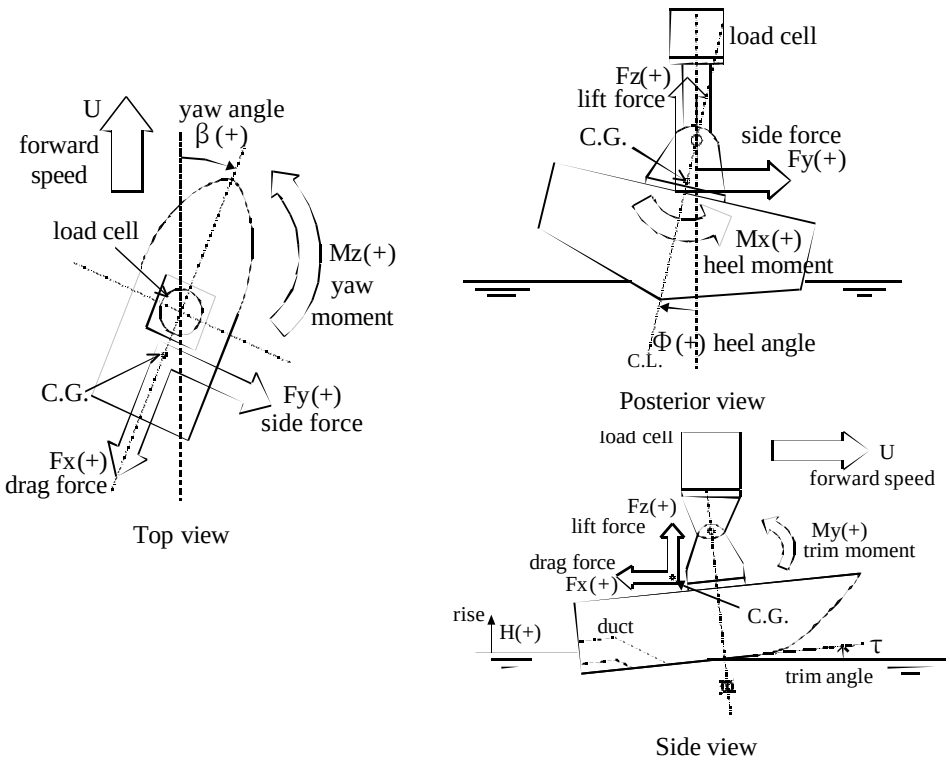

Figure 1: Schematic views of experimental setup and coordinate system

TABLE 2
EXPERIMENTAL CONDITIONS

Condition	A	B	C
Rise H(mm)	20	30	40
Heel ϕ (degree)	20	30	10
Trim τ (degree)	2	4	4
Yaw β (degree)	10	10	10

EXPERIMENTAL RESULTS

Effect of advanced speed

Measurements of hydrodynamic forces acting on the hull are carried out for various advanced speeds in the range of Froude number between 2.0 and 4.4. Measured transverse force and

roll moments are shown in Figure 2. The results of transverse force are proportional to the square of advance speed as shown in this figure. The results of resistance, vertical lift, trim moment and yaw moment show the same tendency too. Measured roll moment, however, is not in proportional to square of speed at high advanced speed.

Experimental Results

Some typical results of measured hydrodynamic forces are shown in Figures 3-8.

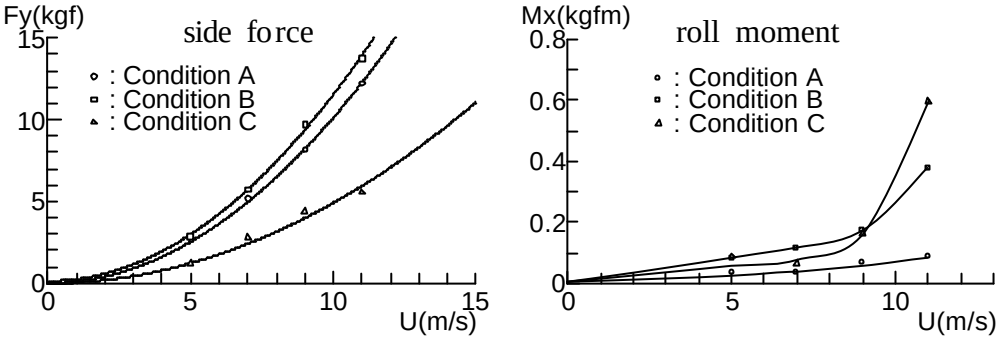

Figure 2: Effects of advance speeds on forces acting on fully captive model

DISCUSSIONS

Yaw Moment

Yaw moment significantly affects the maneuverability of a craft. The measured results are shown in Fig.3, in which the value is positive when the restoring moment is acted. The results shown in Fig.3 show that the yaw moment is usually positive, and the positive value increases as a craft rises. This suggests that a planing craft has a good course keeping ability in planing condition. This fact is in good agreement with the conclusion by Kobayashi et.al.(1995). The experimental results show that for attitude with zero trim and small rise yaw moment becomes negative. This suggests that turning ability of such craft become good for such attitude.

The experimental results at zero yaw angles demonstrate that yaw moment is generated by heel angle.

Transverse Force

Measured transverse force is shown in Figure 4. The force is in proportional to yaw angle, or angle of attack. The effect of rise on transverse force is not significant except when trim angle is zero. The effect of trim angle on it is significant as shown in this figure.

Resistance

Resistance may affect speed reduction in maneuvering motion. Measured force is shown in Figure 5. The results show that resistance in oblique towing condition gradually decreases with increasing yaw angle.

Vertical Lift Force

Vertical lift may affect planing condition in turning motion. Measured results are shown in Figure 6. The results show that vertical lift force mainly depends on trim angle, and the effect of rise on it is small. When yaw angle is small ($\beta < 10$deg.), the lift is independent of heel angle. When yaw angle is large, however, the lift force increases with increasing heel angle. At large yaw angle, the lift force decreases with yaw angle when heel angle is small, and increases up to several times of the value at $\beta=0$. This may be because the increase of heel angle works as increasing angle of attack.

Trim Moment

Trim moment is one of most important factor for planing because vertical lift force depends on it. Measured trim moment is shown in Figure 7. The trim moment is almost constant without any effect of yaw angle when heel angle is moderate ($\phi < 20$deg.). The moment significantly depends on rise. At small rise, bow up moment is acted on the hull. As rise increases, the bow up moment decreases, and when rise is large bow down moment becomes to be acted on it. At large heel condition, the trim moment is significantly affected by trim and yaw angles.

Heel Moment

Measured heel, or roll moment is shown in Figure 8. The values in this figure show dynamic component of roll restoring moment, which does not include static component at Fn=0. The results demonstrate the roll moment decreases with increasing yaw angle, and becomes negative at large yaw angle.

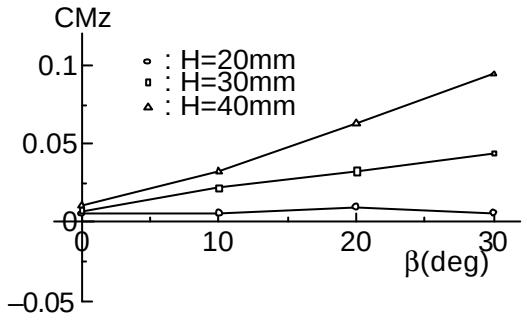

rise at heel ϕ=20deg., trim τ =4deg.

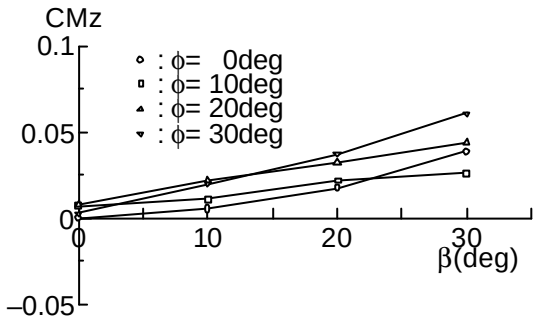

heel at rise *H*=30mm, trim τ =4deg.

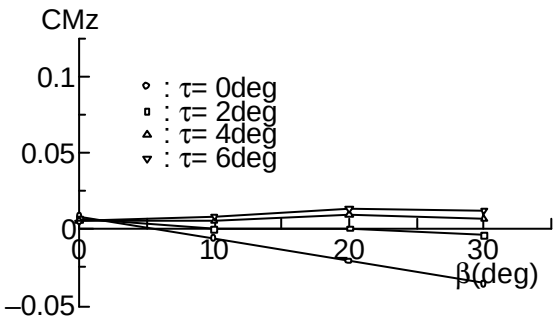

trim at rise *H*=20mm, heel ϕ=20deg.

Figure 3: Effect of running attitude on yaw moment coefficient

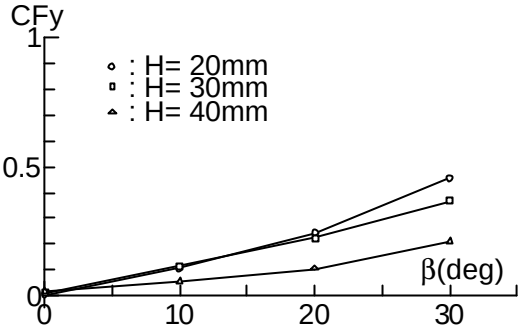

rise at heel ϕ=10deg., trim τ =0deg.

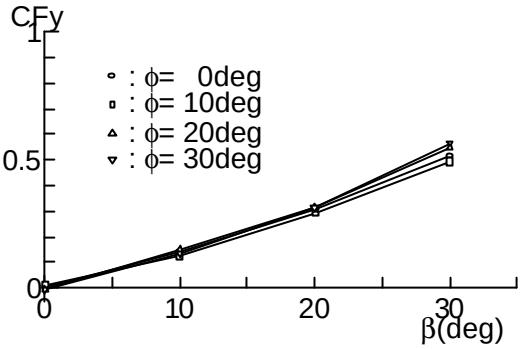

heel at rise *H*=20mm, trim τ =2deg.

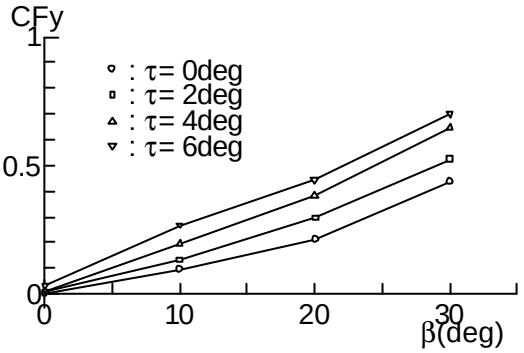

trim at rise *H*=30mm, heel ϕ=20 deg.

Figure 4: Effect of running attitude on side force coefficient

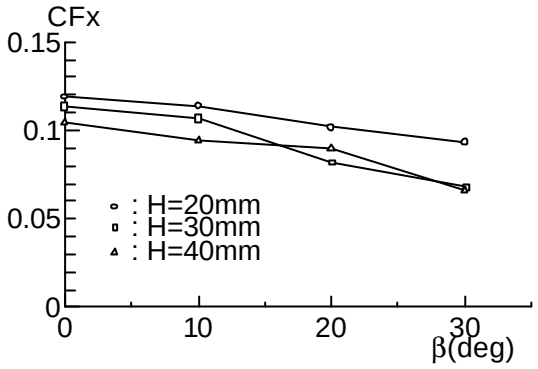

rise at heel ϕ=20deg., trim τ =4deg.

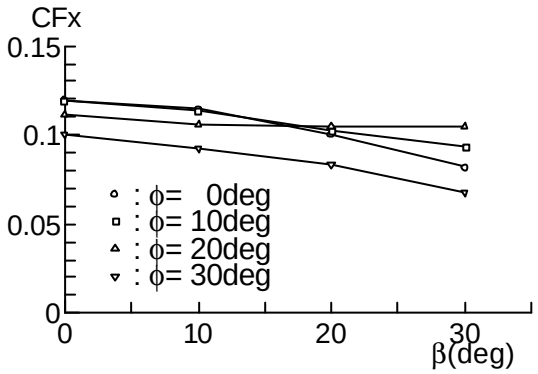

heel at rise *H*=20mm, trim τ =4deg.

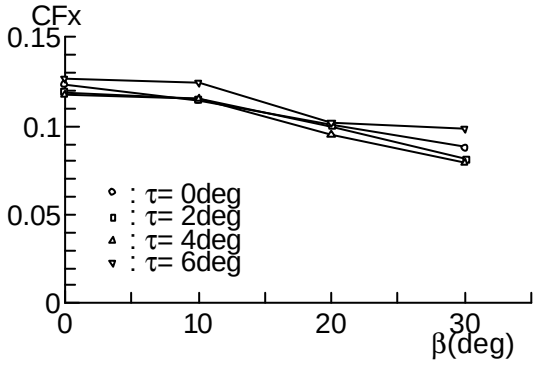

trim at rise *H*=30mm, heel ϕ=20 deg.

Figure 5: Effect of running attitude on drag coefficient

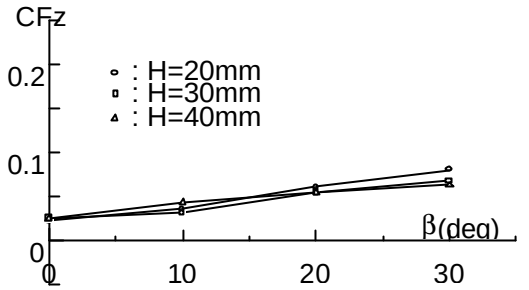

rise at heel ϕ=20deg., trim τ =4deg

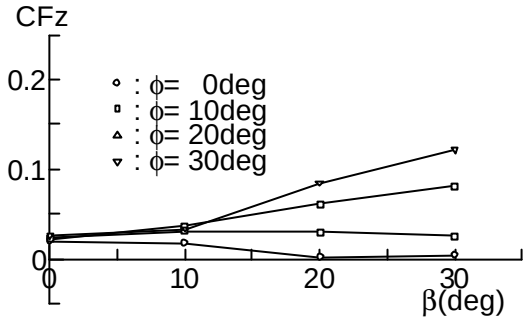

heel at rise *H*=20mm, trim τ =4deg.

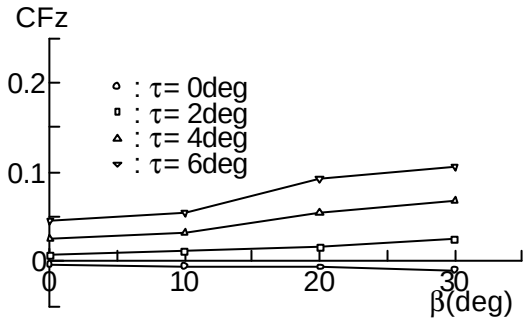

trim at rise *H*=30mm, heel ϕ=20 deg.

Figure 6: Effect of running attitude on vertical lift coefficient

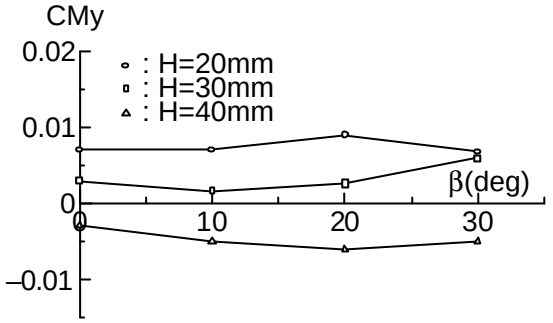

rise at heel ϕ=10deg., trim τ =4deg.

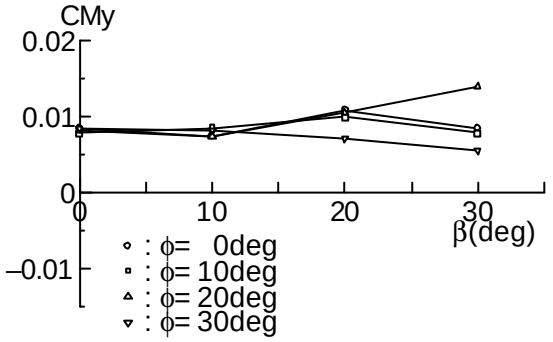

heel at rise *H*=20mm, trim τ =6deg.

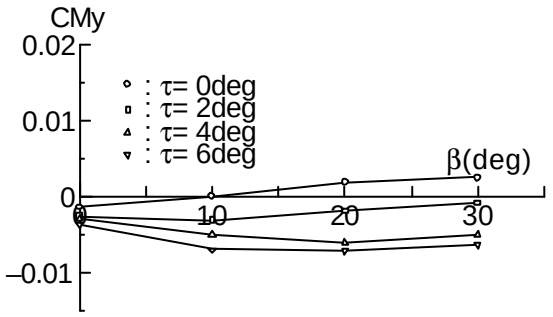

trim at rise H=40mm, heel ϕ=10 deg.

Figure 7: Effect of running attitude on trim moment coefficient

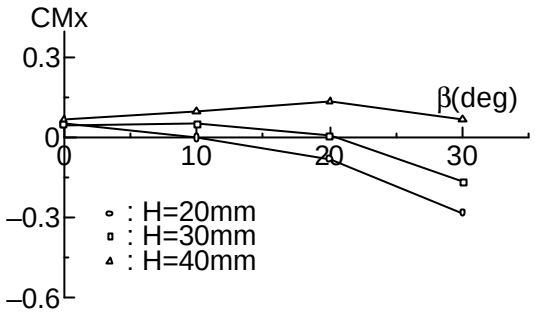

rise at heel ϕ=20deg. trim τ =4deg.

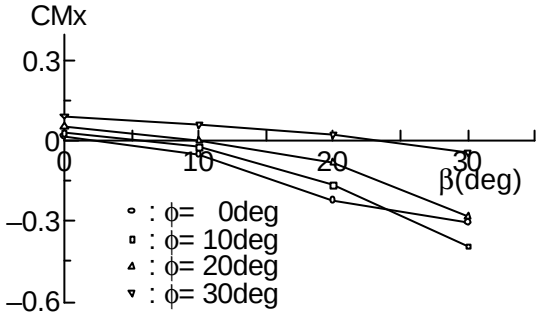

heel at rise H=20mm trim τ =4deg.

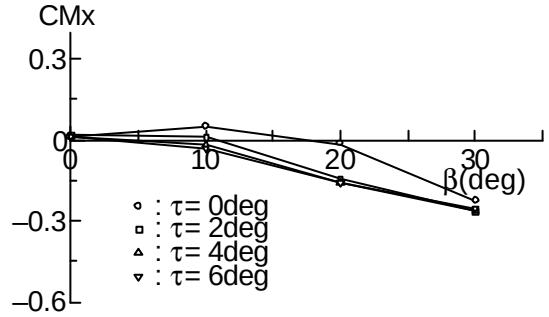

trim at rise H=30mm heel ϕ=0 deg.

Figure 8: Effect of running attitude on heel moment coefficient

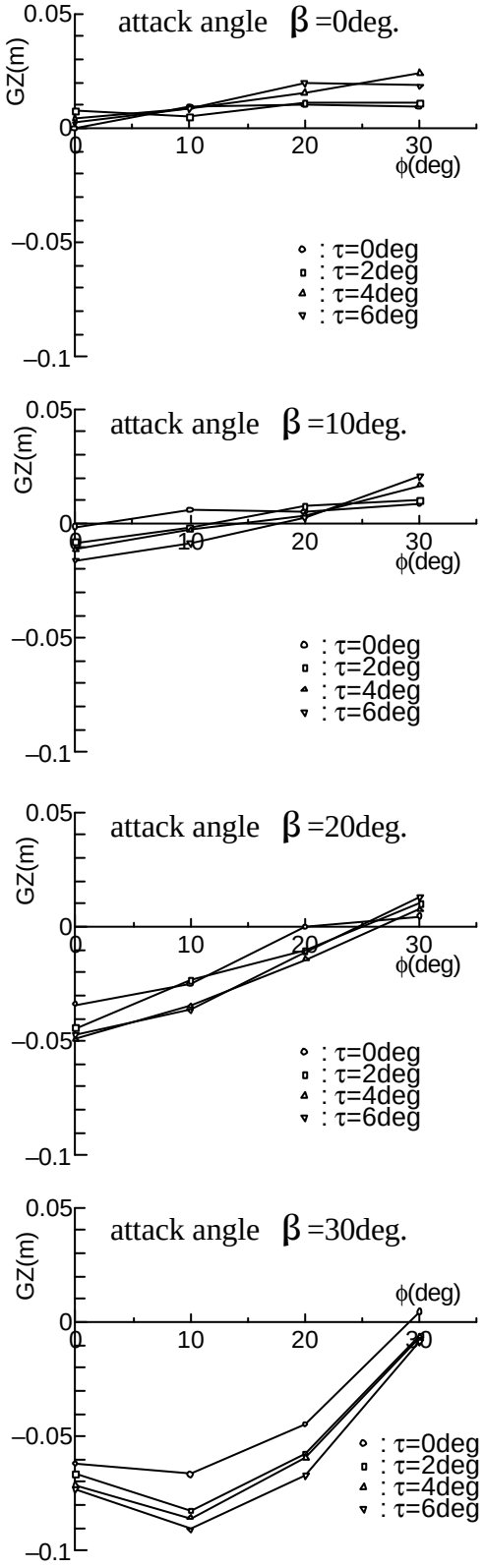

Figure 9: GZ curve at *H*=20mm

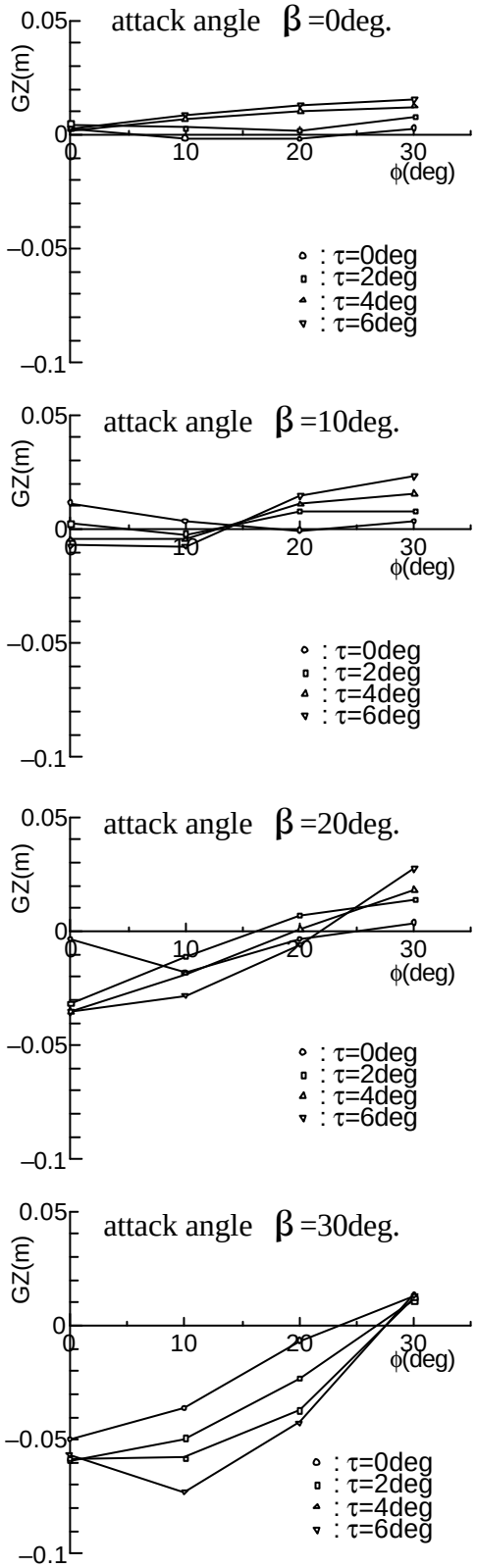

Figure 10: GZ curve at *H*=30mm

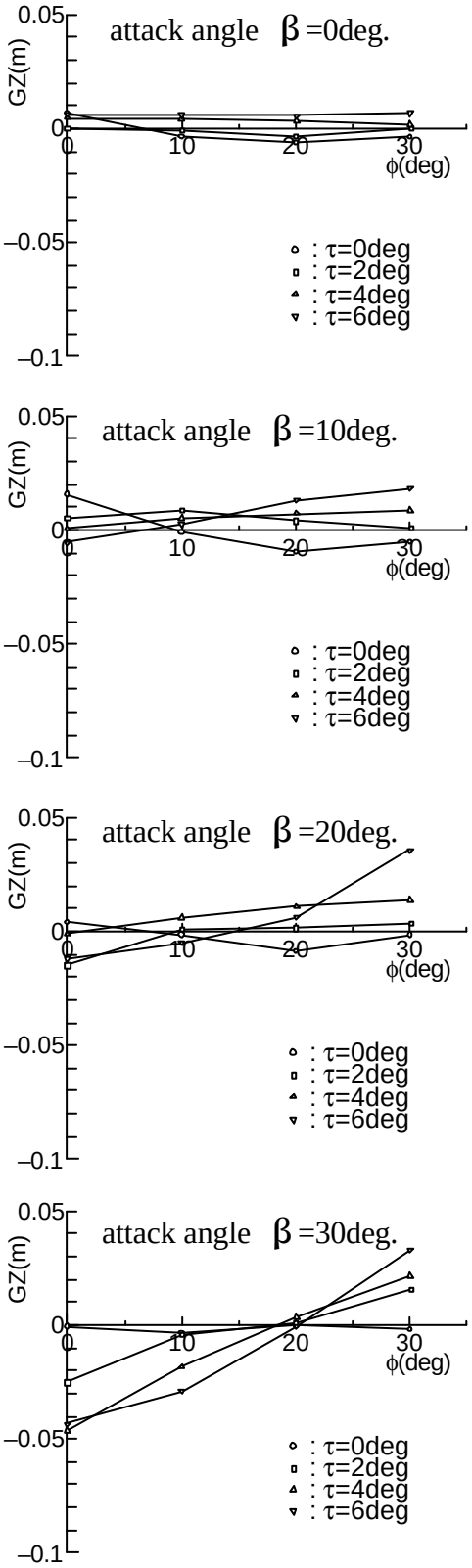

Figure 11: GZ curve at *H*=40mm

STABILITY AT HIGH SPEED TURNING

GZ curves are calculated fom the measured heel moment shown in previous chapter and calculated static restoring moment as shown in Figures 9-11. The results demonstrate that large negative moment is acted on the hull at large yaw angle. The forces acting on a hull in turning motion are shown in Figure 12. Large negative moment can cause large heel in high speed turning.

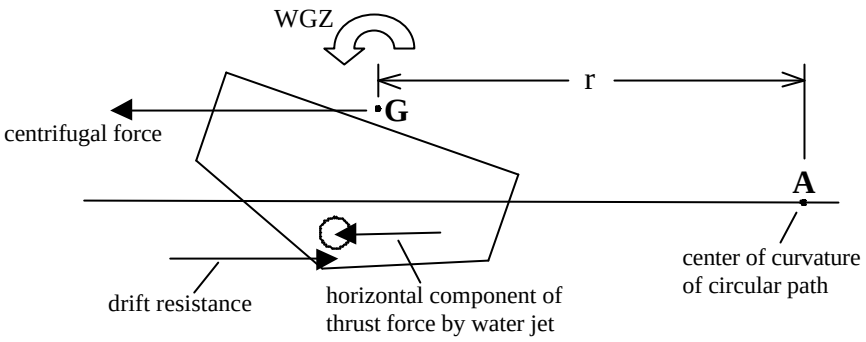

Figure 12: Forces acting on a planing hull during steady turning motion

CONCLUSIONS

Measurements of six-component hydrodynamic forces acting on a planing hull obliquely towed in constant speed are carried out for various attitudes in a towing tank and following conclusions are obtained.

1. Hydrodynamic forces acting on a planing hull obliquely towed significantly depend on running attitudes. Therefore, in maneuvering of such planing craft it should be needed to take into account the effects of attitude on hydrodynamic derivatives.
2. At planing condition, strong restoring moment in yaw is acted on the hull. Therefore, the craft have good course keeping performance at high speed.
3. Dynamic force decreases roll restoring moment at large yaw angle. Therefore large heel can occur in high speed turning for a planing craft.

References

Kobayashi H., Arai Y., Ishibashi A., Okuda S., Okamoto Y. and Takeuchi A (1995). A Study on the Maneuverability of High-Speed Boat. *Journal of the Kansai Society of Naval Architects, Japan.* **223**, 81-90.